Catalog No.CN-0007

G+® 吉嘉

PRODUCT CATALOGUE

Hollow Rotary Table

SV Type for Servo Motor

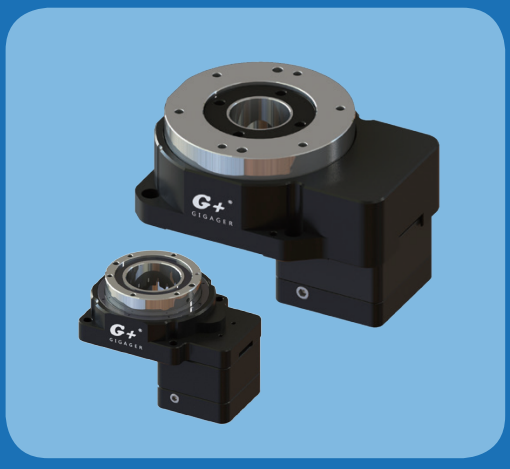

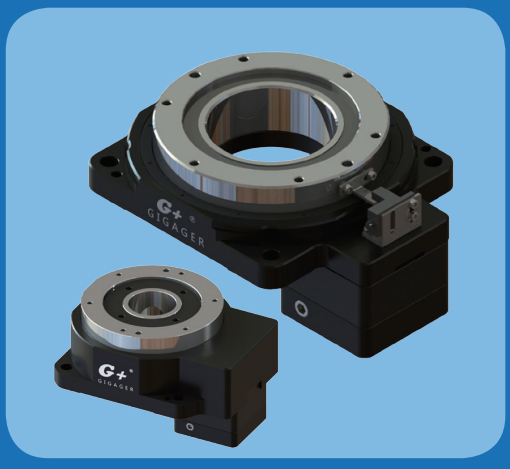

G+® HOLLOW ROTARY TABLE

Revolutionary New Solution for Rotary Motion Control

SV Type Hollow Rotary Table for Servo Motor

The SV type of GIGAGER Hollow Rotary Table is a type of high rigidity high precision hollow rotary stage which can match for servo motor. It takes full advantage of the flexibility of the servo motor, giving designers greater freedom of mechanism design.

- Separate Table makes design more freely
- High Positioning Accuracy≦1
- High flexibility on choosing Servo Motor
- Large-diameter hollow output table
- High torque output
- High cost performance

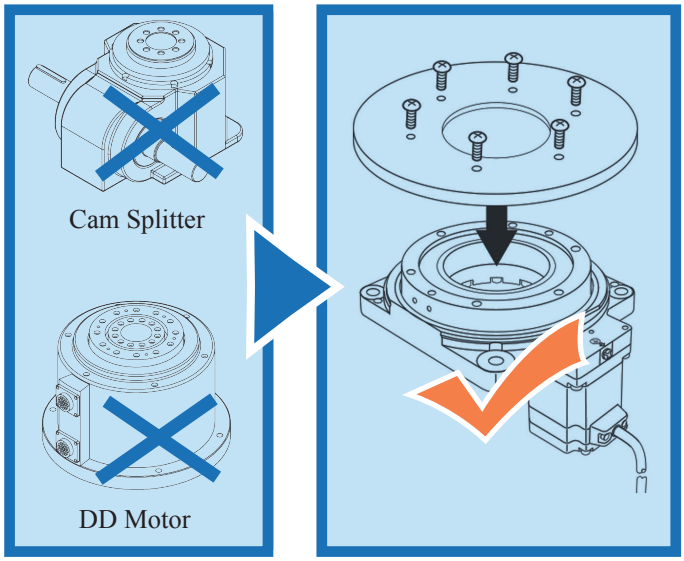

- **Improve Reliability and Reduce Cost Through Direct Connections**
  Equipment table and the robot arm can be directly installed on the rotating platform. Compared with the use of mechanical parts such as pulleys and belt, it can reduce the time and cost of mechanical design, parts deployment, belt state adjustment and other aspects.

- **Motor Configuration**
  Can freely equip with Stepper Motor or Servo Motor
  *GSN series Stepper Motor Excluded

- High Precision Positioning without Backlash
  No backlash, positioning accuracy ≦ 1min, repeat positioning accuracy up to ±5 arc seconds.

- Large Diameter Hollow Structure
  Wiring and piping are more convenient and simple, and the advantages of this feature are particularly prominent in complicated wiring and piping environments.

System of Hollow Rotary Table● SV

Standard Configuration	Hollow Rotary Table × 1 set

Optional Accessories	Sensor Plate × 1 pcs
	Photoelectric Sensor × 1 set
	Installation Bracket × 1 set

System Diagram

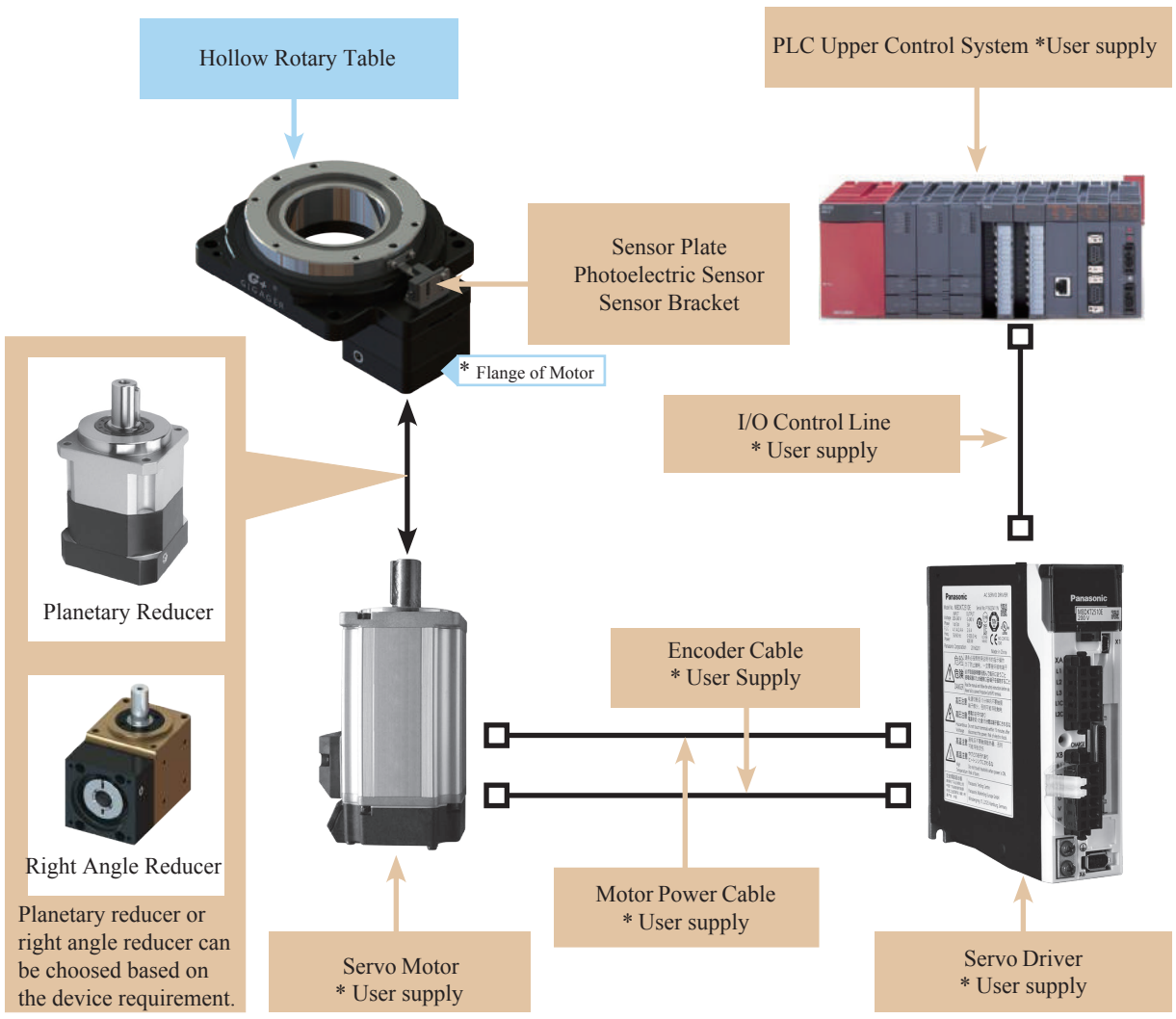

* Accessories Options：the above Accessories Options are for user's reference only, user can purchase as per the requirement.

■ GSN60-05K-SV

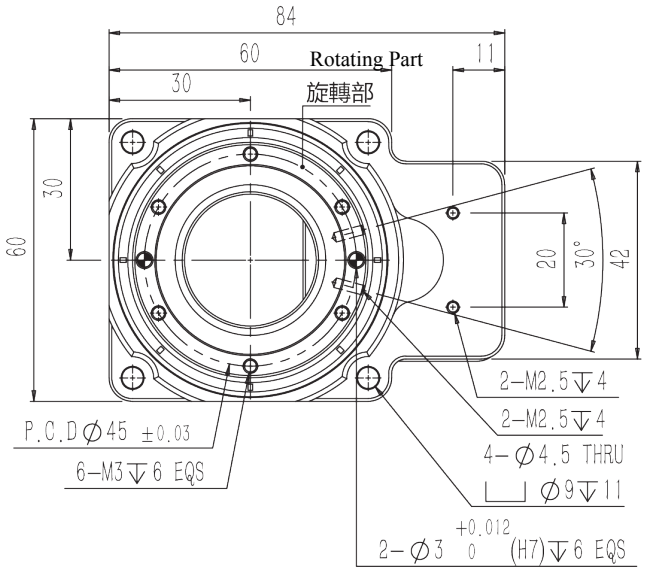

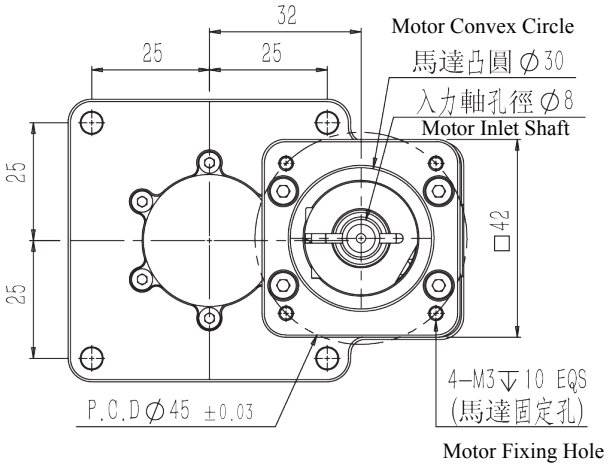

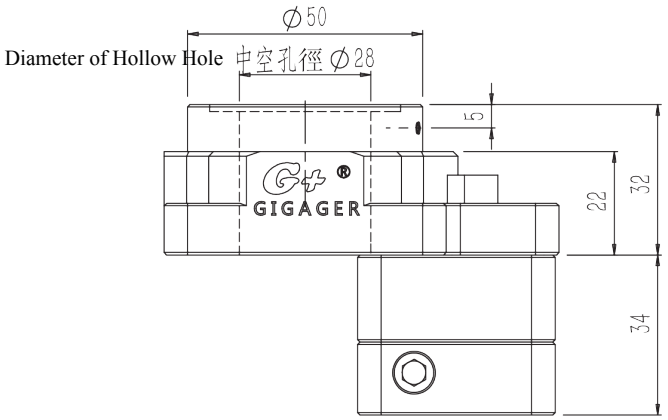

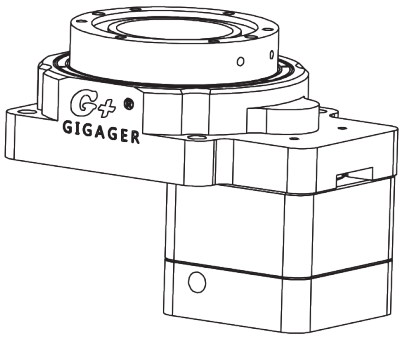

Parameter		
Motor Type		Brand 50-100W SV Motor
Rotary Platform Bearing		Cross Roller Bearing
Permissible Torque	N.m	5.2
Permissible Speed	rpm	300 (Table Surface)
Gear Ratio		1:5
Moment of Inertia	$kg.m^2$	3507×10^{-7}
Permissible Axial Load	N	250
Permissible Moment of Inertia Load	N.m	5
Positioning Accuracy	min	≦1
Repeatability	sec	±5 (0.001°)
Platform Flatness	mm	±0.005
Platform Concentricity	mm	±0.01
Ingress Protection	IP	40
Precision Lifespan	H	15000
Weight	kg	1

Motor Parameter		
Brand	Code	Model
Fuji	F	GYS 500/101
Mitsubishi	M	HF-KFS-13
Panasonic	P	MSMD-5AZ/01G
SANYO	S	Q1AA04010D
Yaskawa	Y	SGMAH-01
Oriental	O	DX010
Delta	T	ECMA-C30401

* The servo motor is configured by the customer. The above model is for reference only.

■ GSN85-05K-SV

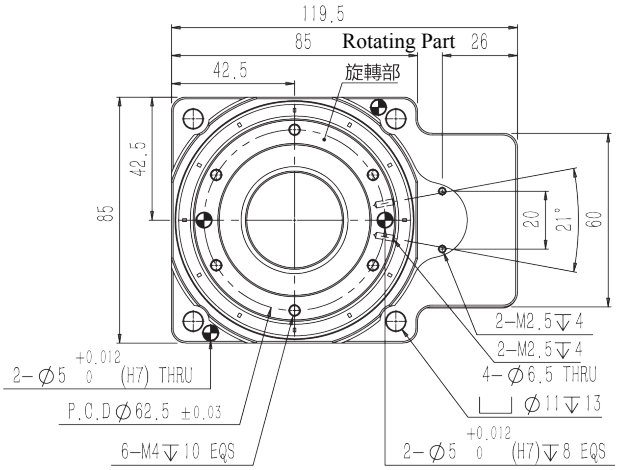

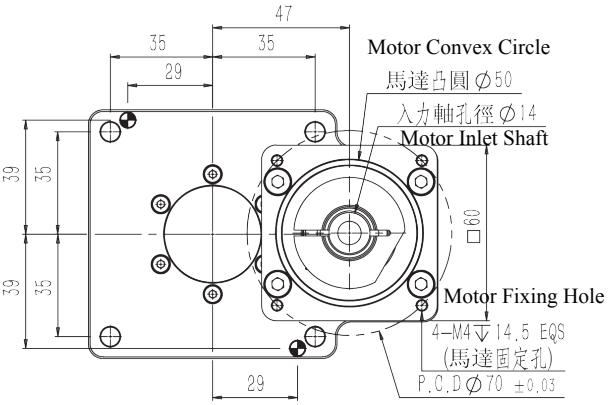

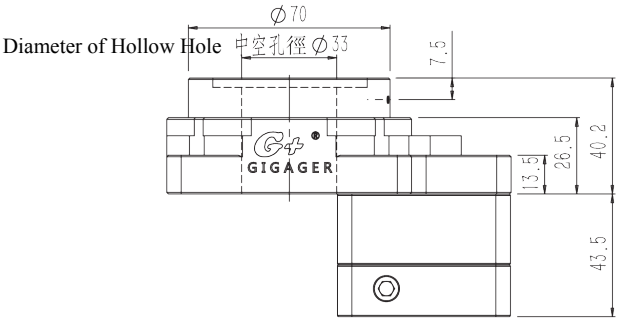

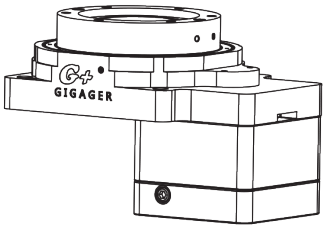

Parameter		
Motor Type		Brand 200-400W SV Motor
Rotary Platform Bearing		Cross Roller Bearing
Permissible Torque	N.m	8
Permissible Speed	rpm	300 (Table Surface)
Gear Ratio		1:5
Moment of Inertia	$kg.m^2$	12593×10^{-7}
Permissible Axial Load	N	500
Permissible Moment of Inertia Load	N.m	10
Positioning Accuracy	min	≦1
Repeatability	sec	±5 (0.001°)
Platform Flatness	mm	±0.005
Platform Concentricity	mm	±0.01
Ingress Protection	IP	40
Precision Lifespan	H	20000
Weight	kg	1.2

Motor Parameter		
Brand	Code	Model
Fuji	F	GYS 201D5
Mitsubishi	M	HF-KFS-23/43
Panasonic	P	MSMD-022/042
SANYO	S	Q1AA06020D
Yaskawa	Y	SGMAH-02/04A
Oriental	O	DX220/240
Delta	T	ECMA-C30602/04

* The servo motor is configured by the customer. The above model is for reference only.

■ GSN85-18K-SV

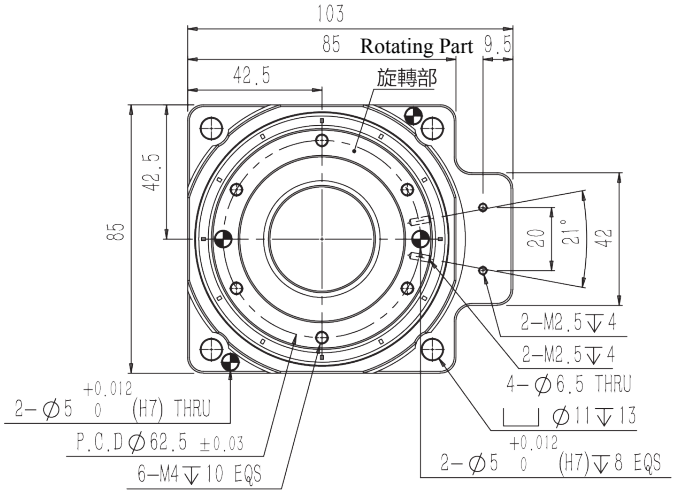

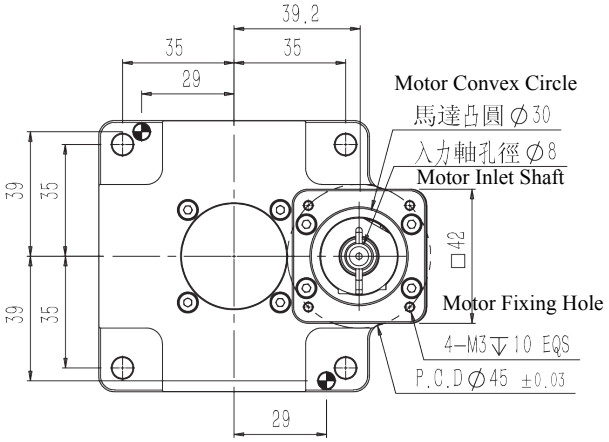

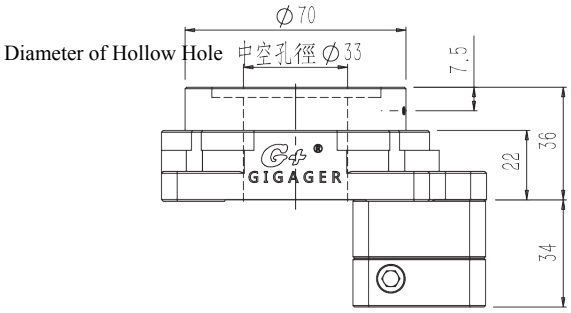

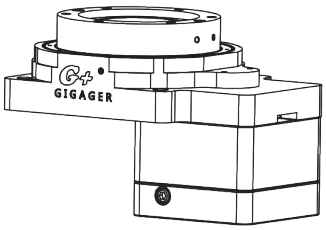

Parameter		
Motor Type		Brand 50-100W SV Motor
Rotary Platform Bearing		Cross Roller Bearing
Permissible Torque	N.m	3.2
Permissible Speed	rpm	150 (Table Surface)
Gear Ratio		1:18
Moment of Inertia	$kg.m^2$	12593×10^{-7}
Permissible Axial Load	N	500
Permissible Moment of Inertial Load	N.m	10
Positioning Accuracy	min	≦1
Repeatability	sec	±5 (0.001°)
Platform Flatness	mm	±0.005
Platform Concentricity	mm	±0.01
Ingress Protection	IP	40
Precision Lifespan	H	20000
Weight	kg	1.2

Motor Parameter		
Brand	Code	Model
Fuji	F	GYS 500/101
Mitsubishi	M	HF-KFS-13
Panasonic	P	MSMD-5AZ/01G
SANYO	S	Q1AA04010D
Yaskawa	Y	SGMAH-01
Oriental	O	DX010
Delta	T	ECMA-C30401

* The servo motor is configured by the customer. The above model is for reference only.

■ GSN130-10K-SV

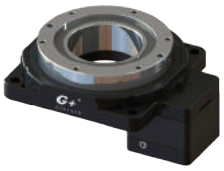

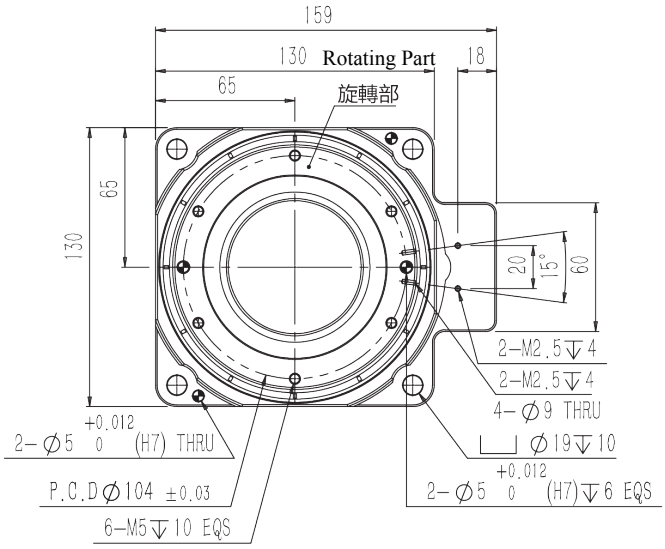

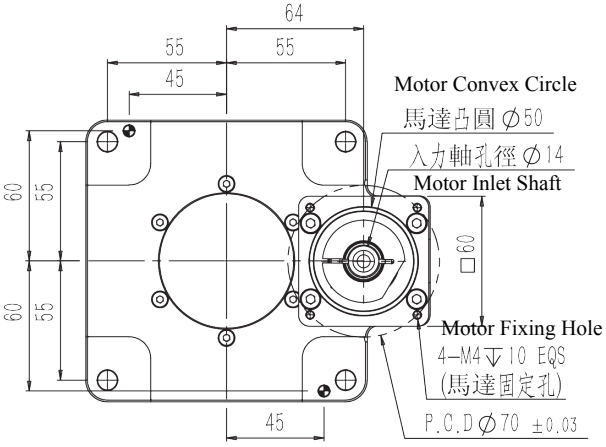

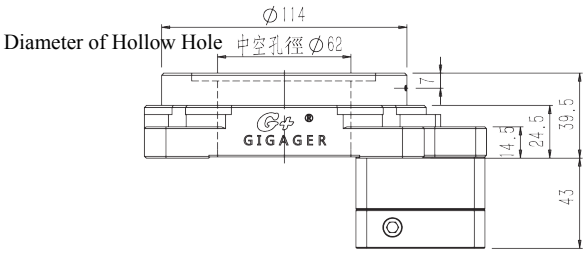

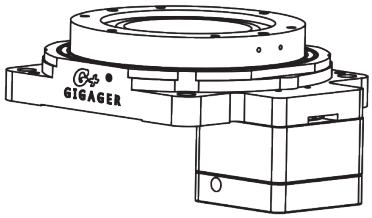

Parameter		
Motor Type		Brand 200-400W SV Motor
Rotary Platform Bearing		Cross Roller Bearing
Permissible Torque	N.m	32
Permissible Speed	rpm	250 (Table Surface)
Gear Ratio		1:10
Moment of Inertia	$kg.m^2$	81556×10^{-7}
Permissible Axial Load	N	2000
Permissible Moment of Inertia Load	N.m	50
Positioning Accuracy	min	≦1
Repeatability	sec	±5 (0.001°)
Platform Flatness	mm	±0.005
Platform Concentricity	mm	±0.01
Ingress Protection	IP	40
Precision Lifespan	H	20000
Weight	kg	2.5

Motor Parameter		
Brand	Code	Model
Fuji	F	GYS 201D5
Mitsubishi	M	HF-KFS-23/43
Panasonic	P	MSMD-022/042
SANYO	S	Q1AA06020D
Yaskawa	Y	SGMAH-02/04A
Oriental	O	DX220/240
Delta	T	ECMA-C30602/04

* The servo motor is configured by the customer. The above model is for reference only.

■ GSN130-18K-SV

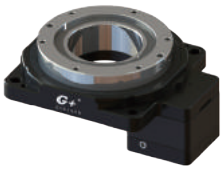

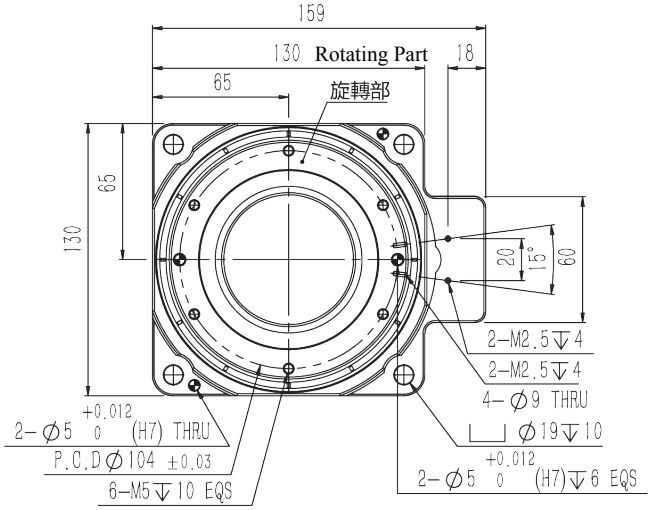

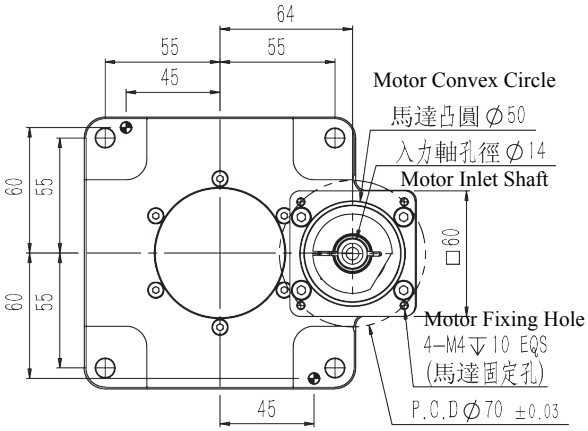

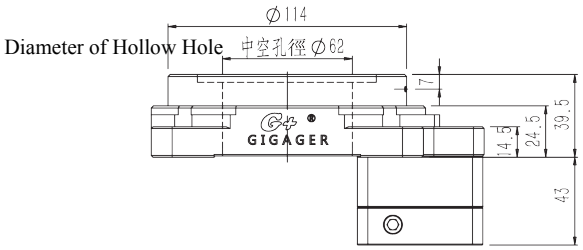

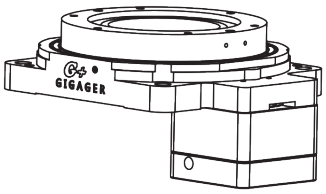

Parameter		
Motor Type		Brand 200-400W SV Motor
Rotary Platform Bearing		Cross Roller Bearing
Permissible Torque	N.m	20
Permissible Speed	rpm	150 (Table Surface)
Gear Ratio		1:18
Moment of Inertia	$kg.m^2$	81556×10^{-7}
Permissible Axial Load	N	2000
Permissible Moment of Inertia Load	N.m	50
Positioning Accuracy	min	≦1
Repeatability	sec	±5 (0.001°)
Platform Flatness	mm	±0.005
Platform Concentricity	mm	±0.01
Ingress Protection	IP	40
Precision Lifespan	H	20000
Weight	kg	2.5

Motor Parameter		
Brand	Code	Model
Fuji	F	GYS 201D5
Mitsubishi	M	HF-KFS-23/43
Panasonic	P	MSMD-022/042
SANYO	S	Q1AA06020D
Yaskawa	Y	SGMAH-02/04A
Oriental	O	DX220/240
Delta	T	ECMA-C30602/04

* The servo motor is configured by the customer. The above model is for reference only.

■ GSN200-10K-SV

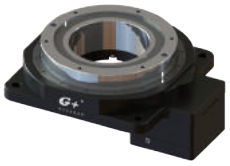

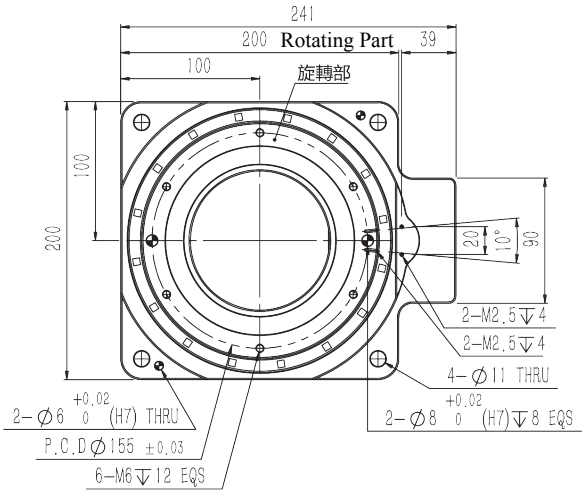

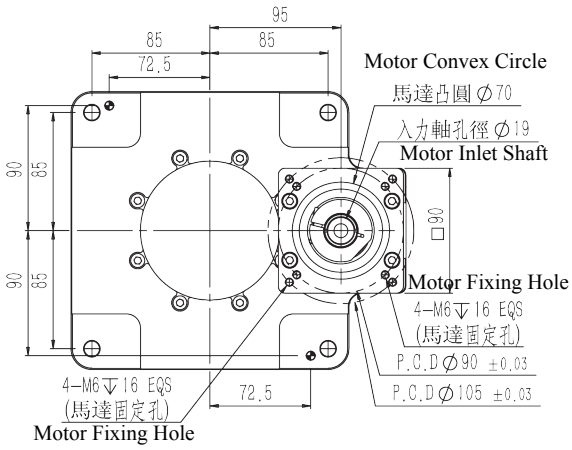

Diameter of Hollow Hole Φ100mm

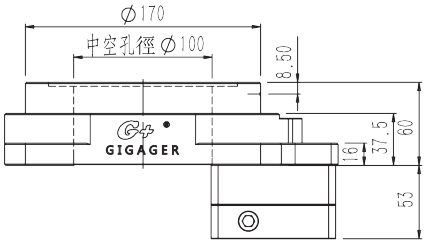

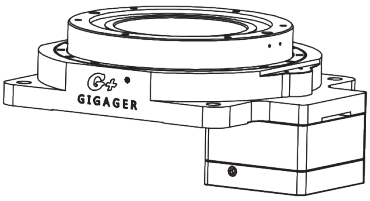

Parameter		
Motor Type		Brand 750W SV Motor
Rotary Platform Bearing		Cross Roller Bearing
Permissible Torque	N.m	65
Permissible Speed	rpm	250 (Table Surface)
Gear Ratio		1:10
Moment of Inertia	$kg.m^2$	361220×10^{-7}
Permissible Axial Load	N	4000
Permissible Moment of Inertia Load	N.m	100
Positioning Accuracy	min	≦1
Repeatability	sec	±5 (0.001°)
Platform Flatness	mm	±0.005
Platform Concentricity	mm	±0.01
Ingress Protection	IP	40
Precision Lifespan	H	20000
Weight	kg	8.2

Motor Parameter		
Brand	Code	Model
Fuji	F	GYS 751D5
Mitsubishi	M	HF-KFS-73
Panasonic	P	MSMD082G1U
SANYO	S	Q1AA07075D
Yaskawa	Y	SGMAH-08A
Oriental	O	DX475
Delta	T	ECMA-C30807

* The servo motor is configured by the customer. The above model is for reference only.

■ GSN200-18K-SV

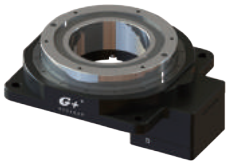

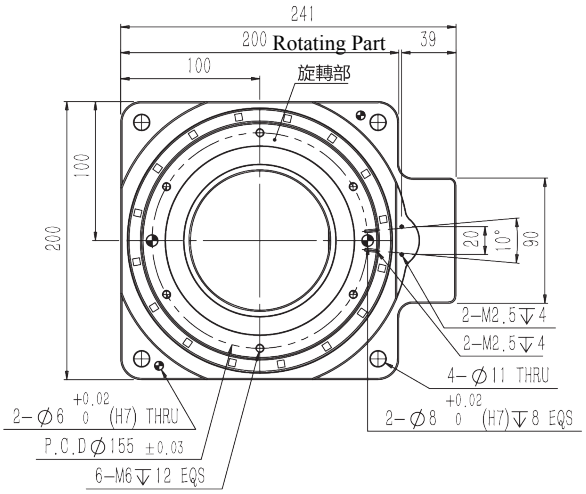

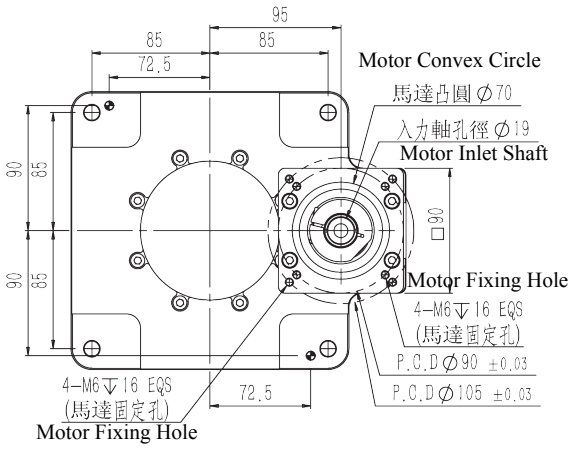

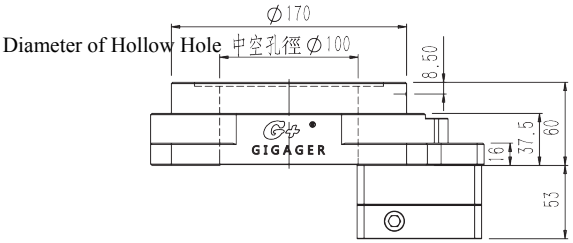

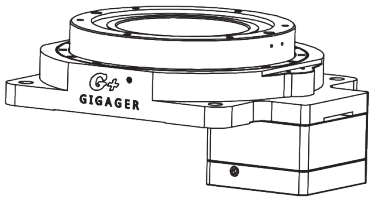

Parameter		
Motor Type		Brand 750W SV Motor
Rotary Platform Bearing		Cross Roller Bearing
Permissible Torque	N.m	50
Permissible Speed	rpm	150 (Table Surface)
Gear Ratio		1:18
Moment of Inertia	$kg.m^2$	361220×10^{-7}
Permissible Axial Load	N	4000
Permissible Moment of Inertia Load	N.m	100
Positioning Accuracy	min	≦1
Repeatability	sec	±5 (0.001°)
Platform Flatness	mm	±0.005
Platform Concentricity	mm	±0.01
Ingress Protection	IP	40
Precision Lifespan	H	20000
Weight	kg	8.2

Motor Parameter		
Brand	Code	Model
Fuji	F	GYS 751D5
Mitsubishi	M	HF-KFS-73
Panasonic	P	MSMD082G1U
SANYO	S	Q1AA07075D
Yaskawa	Y	SGMAH-08A
Oriental	O	DX475
Delta	T	ECMA-C30807

* The servo motor is configured by the customer. The above model is for reference only.

■ GSB60-05K-SV

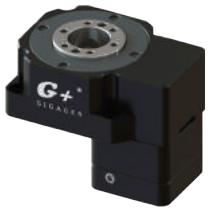

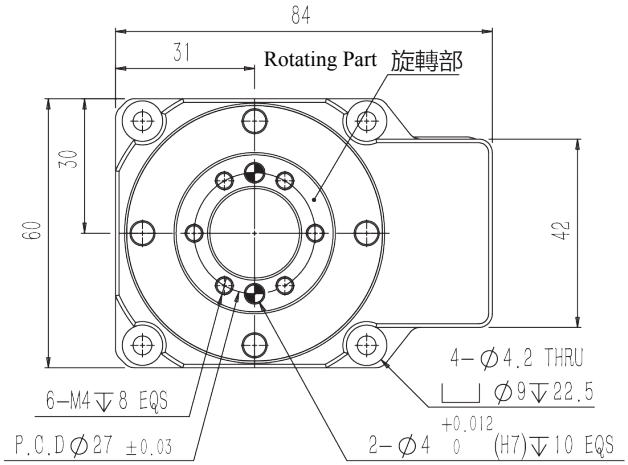

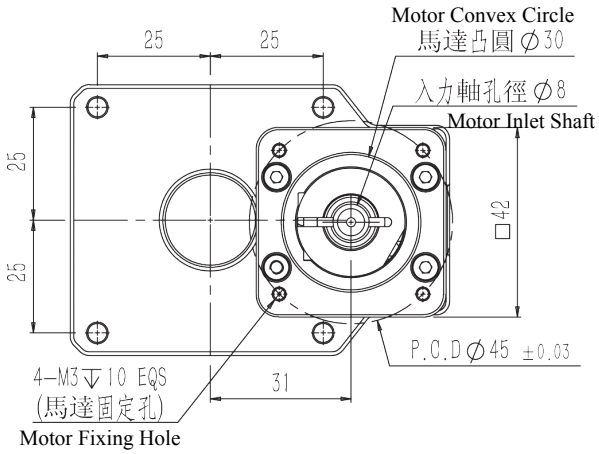

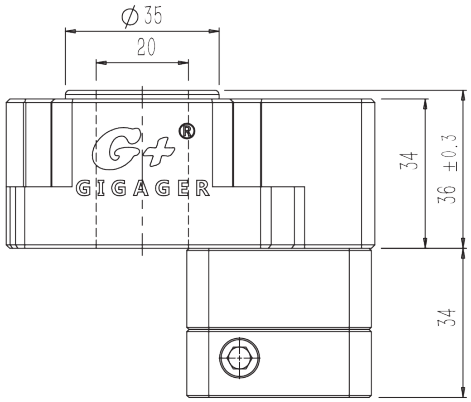

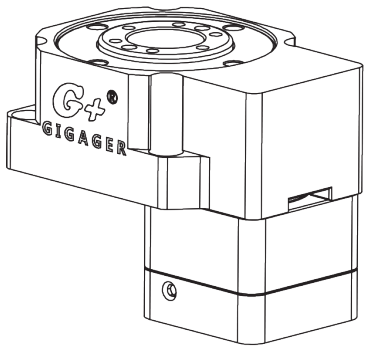

Parameter		
Motor Type		Brand 50-100W SV Motor
Rotary Platform Bearing		Tapered Roller Bearings
Permissible Torque	N.m	5.3
Permissible Speed	rpm	350 (Table Surface)
Gear Ratio		1:5
Moment of Inertia	$kg.m^2$	2330×10^{-7}
Permissible Axial Load	N	100
Permissible Moment of Inertia Load	N.m	5
Positioning Accuracy	min	≦1
Repeatability	sec	±5 (0.001°)
Platform Flatness	mm	±0.005
Platform Concentricity	mm	±0.01
Ingress Protection	IP	40
Precision Lifespan	H	20000
Weight	kg	1

Motor Parameter		
Brand	Code	Model
Fuji	F	GYS 500/101
Mitsubishi	M	HF-KFS-13
Panasonic	P	MSMD-5AZ/01G
SANYO	S	Q1AA04010D
Yaskawa	Y	SGMAH-01
Oriental	O	DX010
Delta	T	ECMA-C30401

* The servo motor is configured by the customer. The above model is for reference only.

■ GSB100-08K-SV

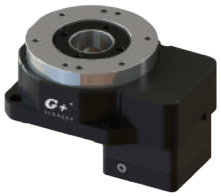

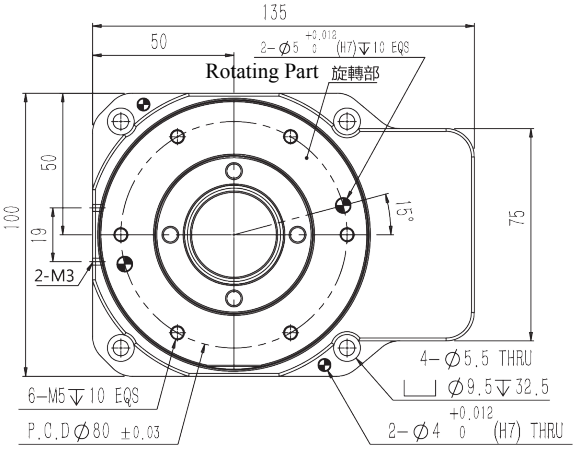

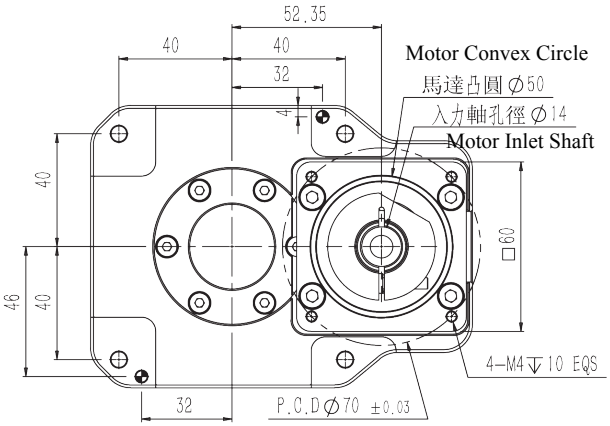

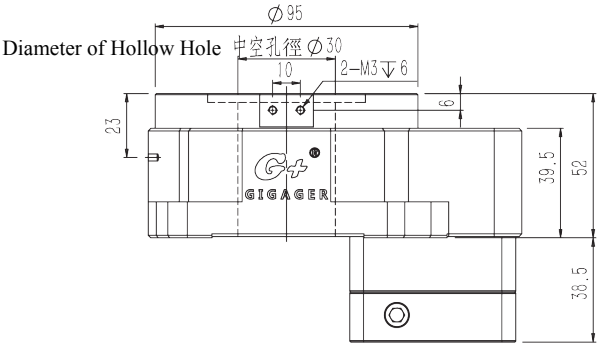

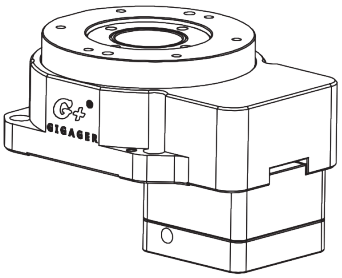

Parameter		
Motor Type		Brand 200-400W SV Motor
Rotary Platform Bearing		Tapered Roller Bearings
Permissible Torque	N.m	26
Permissible Speed	rpm	250 (Table Surface)
Gear Ratio		1:8
Moment of Inertia	$kg.m^2$	3898×10^{-6}
Permissible Axial Load	N	200
Permissible Moment of Inertia Load	N.m	30
Positioning Accuracy	min	≦1
Repeatability	sec	±5 (0.001°)
Platform Flatness	mm	±0.005
Platform Concentricity	mm	±0.01
Ingress Protection	IP	40
Precision Lifespan	H	20000
Weight	kg	2.5

Motor Parameter		
Brand	Code	Model
Fuji	F	GYS 201D5
Mitsubishi	M	HF-KFS-23/43
Panasonic	P	MSMD-022/042
SANYO	S	Q1AA06020D
Yaskawa	Y	SGMAH-02/04A
Oriental	O	DX220/240
Delta	T	ECMA-C30602/04

* The servo motor is configured by the customer. The above model is for reference only.

■ GSB130-10K-SV

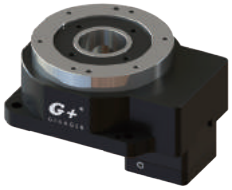

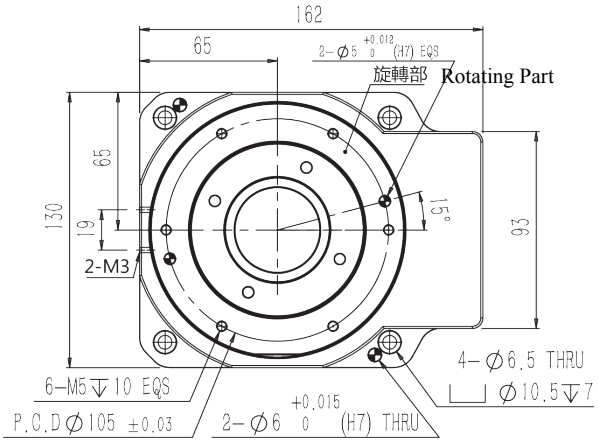

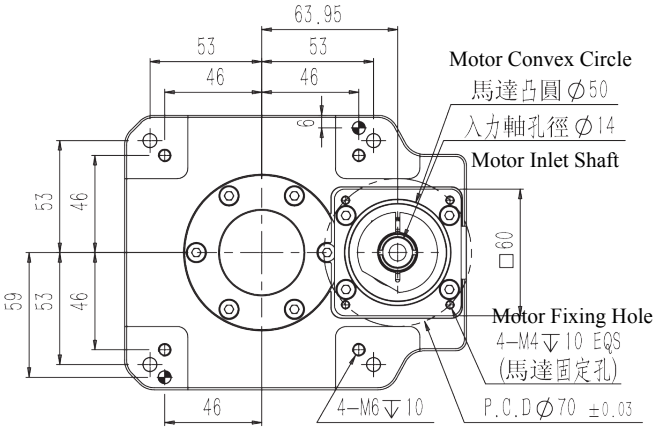

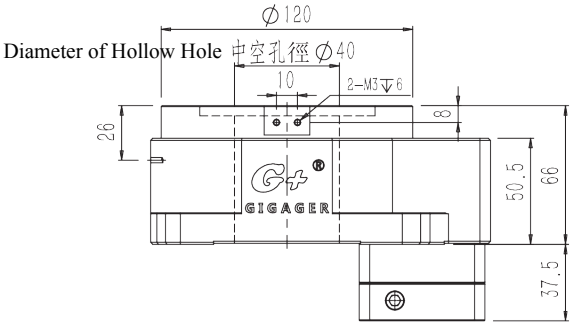

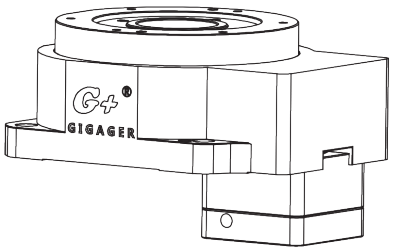

Parameter		
Motor Type		Brand 200-400W SV Motor
Rotary Platform Bearing		Tapered Roller Bearings
Permissible Torque	N.m	48
Permissible Speed	rpm	200 (Table Surface)
Gear Ratio		1:10
Moment of Inertia	$kg.m^2$	9216×10^{-6}
Permissible Axial Load	N	250
Permissible Moment of Inertia Load	N.m	35
Positioning Accuracy	min	≦1
Repeatability	sec	±5 (0.001°)
Platform Flatness	mm	±0.005
Platform Concentricity	mm	±0.01
Ingress Protection	IP	40
Precision Lifespan	H	20000
Weight	kg	4.6

Motor Parameter		
Brand	Code	Model
Fuji	F	GYS 201D5
Mitsubishi	M	HF-KFS-23/43
Panasonic	P	MSMD-022/042
SANYO	S	Q1AA06020D
Yaskawa	Y	SGMAH-02/04A
Oriental	O	DX220/240
Delta	T	ECMA-C30602/04

* The servo motor is configured by the customer. The above model is for reference only.

■ GSB200-10K-SV

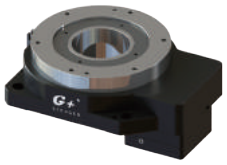

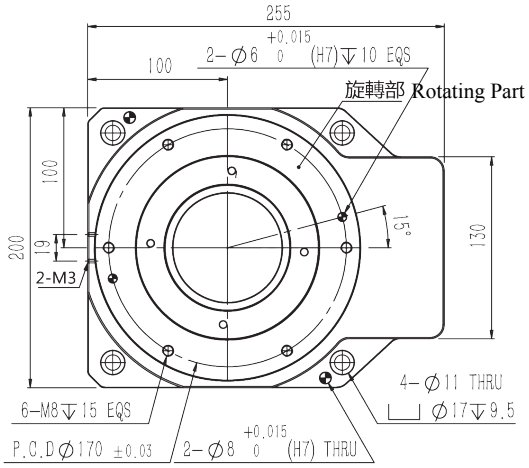

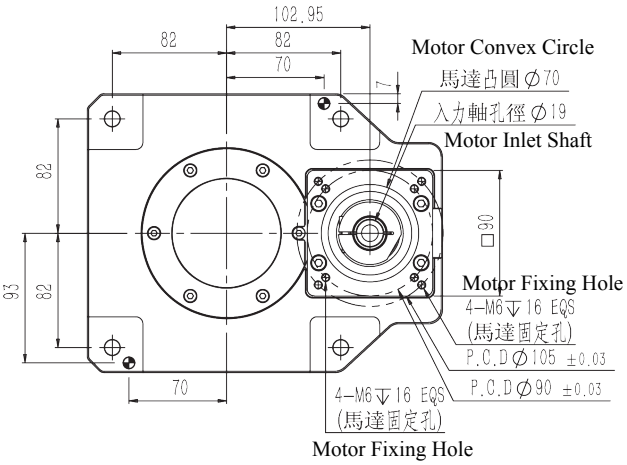

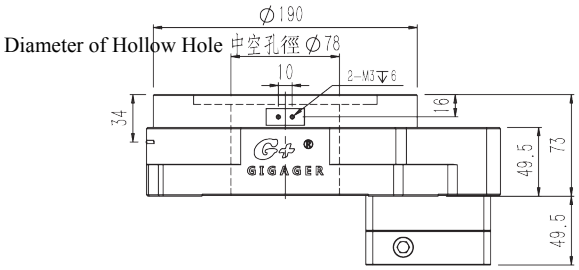

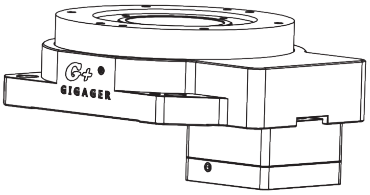

Parameter		
Motor Type		Brand 750W SV Motor
Rotary Platform Bearing		Tapered Roller Bearings
Permissible Torque	N.m	65
Permissible Speed	rpm	200 (Table Surface)
Gear Ratio		1:10
Moment of Inertia	$kg.m^2$	85792×10^{-6}
Permissible Axial Load	N	800
Permissible Moment of Inertia Load	N.m	45
Positioning Accuracy	min	≦1
Repeatability	sec	±5 (0.001°)
Platform Flatness	mm	±0.005
Platform Concentricity	mm	±0.01
Ingress Protection	IP	40
Precision Lifespan	H	20000
Weight	kg	13

Motor Parameter		
Brand	Code	Model
Fuji	F	GYS 751D5
Mitsubishi	M	HF-KFS-73
Panasonic	P	MSMD082G1U
SANYO	S	Q1AA07075D
Yaskawa	Y	SGMAH-08A
Oriental	O	DX475
Delta	T	ECMA-C30807

* The servo motor is configured by the customer. The above model is for reference only.

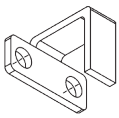

■ B-G1 (GSB series sensor plate)

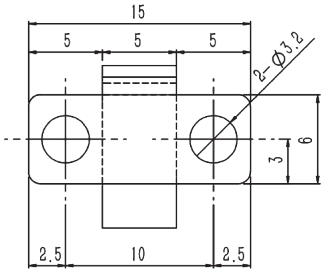

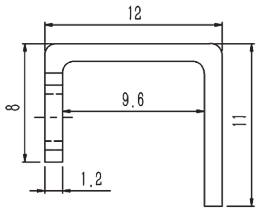

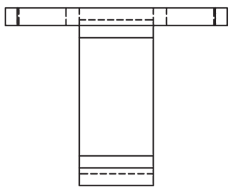

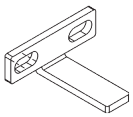

■ N-G1 (GSN series sensor plate)

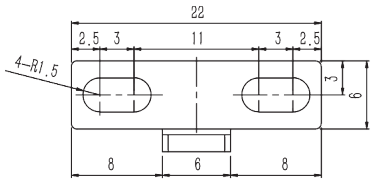

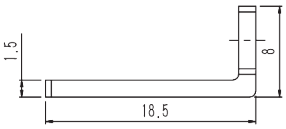

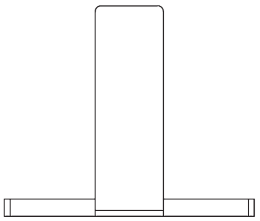

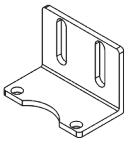

■ N-G2 (GSN series sensor bracket)

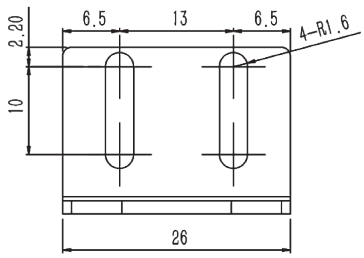

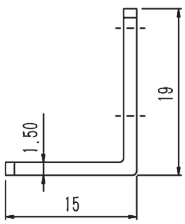

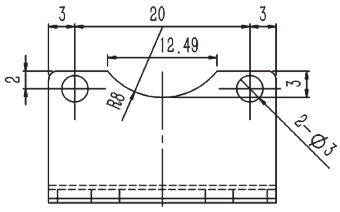

- GSB series no need sensor bracket
- Home sensor set：GSB series equipped with OMRON EE-SX672，GSN series equipped with OMRON EE-SX674

■ Code of Combination Product

GSN	60	Z	15	SV
		F	15/20/25/35/50	
		M		
	85	Z	10/15/54	
		F	15/20/25/35/50/54/72/90/180	
		M		
	130	Z	20/30/36/54	
		F	30/40/50/54/70/72/90/100/126/180	
		M		
	200	Z	20/30/36/54	
		F	30/50/54/72/90/126/180	
		M		
GSB	60	Z	15	SV
		F	15/20/25/35/50	
		M		
	100	Z	16/24	
		F	24/32/40/56/80	
		M		
	130	Z	20/30	
		F	30/40/50/70/100	
		M		
	200	Z	20/30	
		F	30/40/50/70/100	
		M		
GSA	42	F	9/12/15/21/30	SV
		M		
	90	F		
		M		
	130	F		
		M		
	200	F	15/20/25/35/50	
		M		
GSZ	42	F	9/12/15/21/30	SV
		M		
	60	F	6/8/9/10/12/14/15/20/30	
		M		
	90	F		
		M		

Series	Model	Type of Reducer	Gear Ratio	Motor Type
GSN series GSB series GSA series GSZ series	42：42mm 60：60mm 85：85mm 90：90mm 100：100mm 130：130mm 200：200mm	Z：with Right Angle Reducer F：with Spur Planetary Reducer M：with Helical Planetary Reducer		SV：Servo Motor

Order Code Example 1: GSN60Z-15K-SV
Order Code Example 2: GSB200M-50K-SV
Order Code Example 3: GSZ60M-15K-SV

Combination Case

Micro Rotary Axis

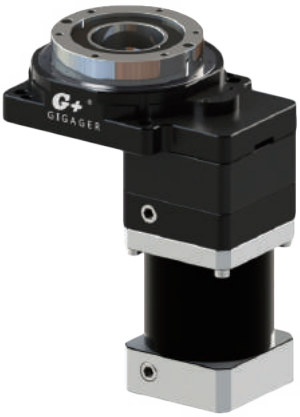

Hollow Rotary Actuator with Planetary Gearbox

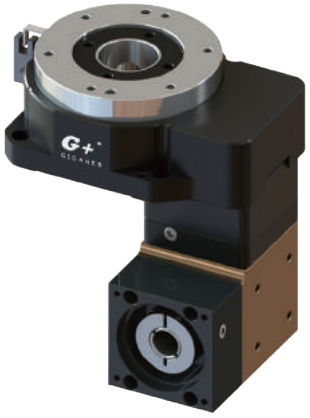

Hollow Rotary Actuator with Right Angle Reducer

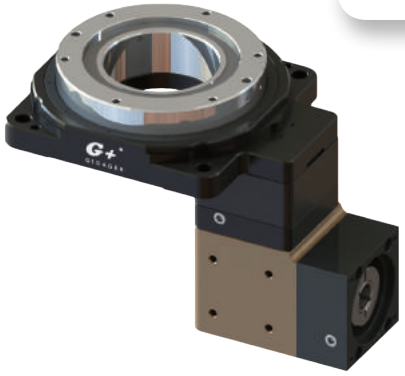

Hollow Rotary Actuator with Right Angle Reducer

Servo Motor Installation Instruction

Motor Installation Instruction

① 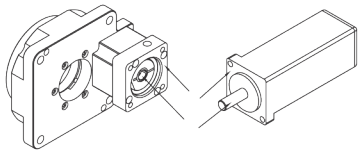

First match the size of the motor and the rotating platform and remove any foreign objects on the surface.

② 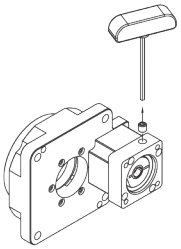

Remove the screw plug on the adapter flange and adjust the position until the fastening bolt can be seen [Note 1].

③ 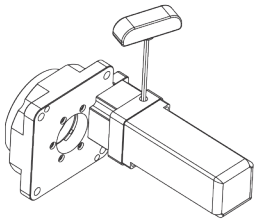

Adjust the motor and adapter flange position and gently tighten the fastening bolts until the locking ring is no longer freewheeling.

④ 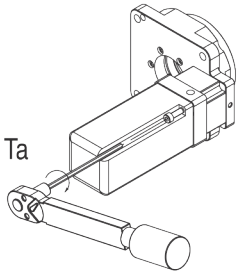

Diagonal preliminary fixing bolts, after the completion of step 5, refer to the tightening torque standard Ta [Note2], tighten the fastening bolts。

⑤ 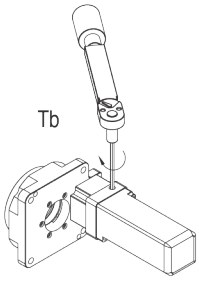

Refer to the tightening torque standard Tb [Note2], tighten the fastening bolts.

⑥ 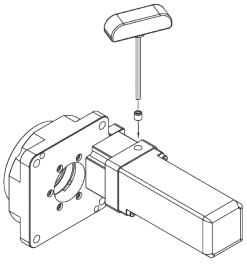

Tighten the screw plug.

Note 1: How to install motor?

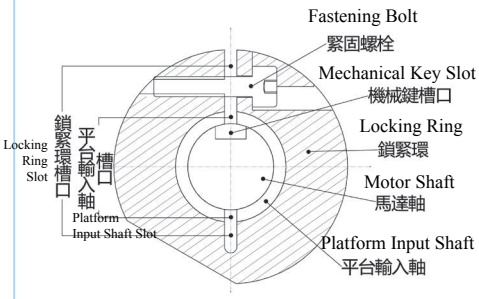

Installation method for motor with mechanical key

Pull out the mechanical key, adjust the position of the locking ring, align its notch with the notch of the input shaft of the rotating platform, and then apply grease to the platform input shaft hole and the motor shaft, insert the motor shaft, and make the mechanical key slot and Align the locking ring notches to maximize the fastening bolts of the locking ring for a stronger connection

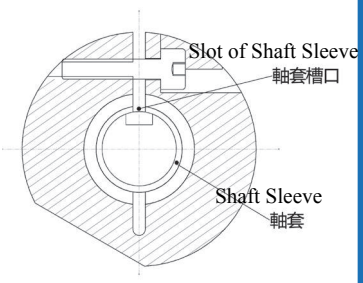

Installation method with sleeve

Since the motor shaft diameter is too small to match the shaft input shaft hole of the platform, the sleeve can be added for adjustment. The installation method is the same as the motor mounting method with mechanical keys. It only needs to put the sleeve and open with the locking ring. Align the notches and tighten the fastening bolts of the locking ring.

Note 2: Wrench bolt tightening torque

Wrench Bolt Size	Motor Installation Ta(8.8T)		Locking Ring Installation Tb(12.9T)	
	N.m	kgf.cm	N.m	kgf.cm
M3	1.28	13	2.15	22
M4	2.9	30	4.95	50
M5	5.75	59	9.7	99
M6	9.9	101	16.5	168
M8	24	245	40	408
M10	48	489	81	826
M12	83	846	140	1428
M14	132	1346	220	2243
M16	200	2039	340	3467

Installation Instruction of Hollow Rotary Actuator

■How to install a hollow rotating actuator?

Leave a motor outlet on the machine mounting plate to expose the motor. Use the two locating pin holes (the locating pin holes in GSB60 and GSN60 are common to the mounting holes) and mount the hollow rotating actuator to the machine mounting plate shown below. These mounting holes are used to accurately position the hollow rotating actuator on the machine, making sure to secure the locating pins to the mounting plate.

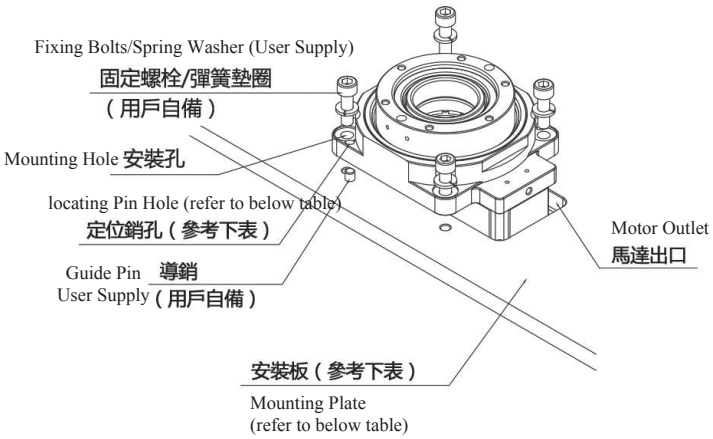

■How to install a load on a hollow rotating actuator

Install the load using the 6 mounting holes on the hollow rotating actuator. There are 2 pin holes for mounting the load on the hollow rotating actuator, which can be used to determine the position of the load. Be sure to fix the positioning pin firmly on the load.

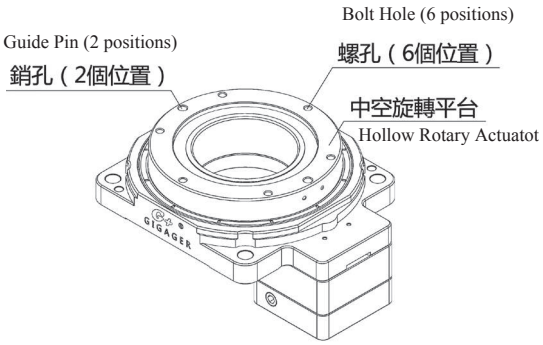

■Installation Precautions

Before installation, read the following installation precautions and install as follows。

- Indoor (area not directly in contact with sunlight)
- Area without heat radiation
- Working environment temperature: 0~+50°C
- Temperature below the origin sensor: 0~+40°C
- Working environment humidity: less than 85%
- There is no flammable or explosive acid gas
- Place to block dust, oil and splashes
- Place without direct shock or excessive impact

●Locating pin hole size

Actuator Model	Diameter (mm)	Depth (mm)	Quantity
GSN85	Ø5 $+^{0.012}_{0}$ (H7)	9.5 (THRU)	2
GSN130		14.5 (THRU)	2
GSN200	Ø8 $+^{0.015}_{0}$(H7)	16 (THRU)	2
GSB100	Ø4 $+^{0.012}_{0}$(H7)	13 (THRU)	2
GSB130	Ø6 $+^{0.015}_{0}$(H7)	15 (THRU)	2
GSB200	Ø8 $+^{0.015}_{0}$(H7)	23 (THRU)	2

●Mounting plate thickness

Actuator Model	Thickness
GSN60	More than 5mm
GSB60	
GSN85	More than 8mm
GSB100	
GSN130	More than 10mm
GSB130	
GSN200	
GSB200	

Calculation Reference of Hollow Rotary Actuator

■Load Calculation / Loads Moment of Inertia (J_W)

The moment of inertia of the load shall be less than 30 times the moment of inertia of the transmission.

■Calculate the Acceleration Torque (T_a) . Refer to below fomula.

Acceleration Torque $Ta[N \cdot m]=(J_M + J_A + J_W) * \frac{\pi}{30} * \frac{(N_2-N_1)}{t_1}$

J_M : Motor Moment of Inertia [kg· m^2]

J_A : Mechanism Moment of Inertia [kg· m^2]

J_W : Load Moment of Inertia [kg· m^2]

N_2 : Working Speed [r/min]

N_1 : Starting Speed [r/min]

t_1 : Acceleration (deceleration) Time [S]

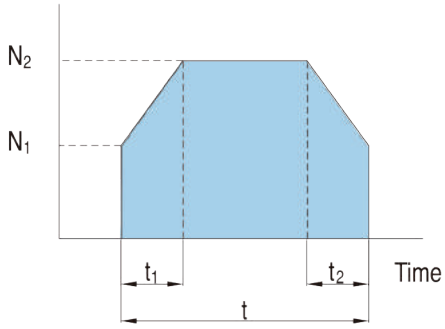

■Calculate the Required Torque

The required torque is calculated by multiplying the sum of the load torque caused by the frictional resistance and the acceleration torque caused by the moment of inertia by the safety factor.

Required Torque T = (Load torque [N.m]+ Acceleration torque [N.m]) x Safety factor

= (T_L+T_a) x S

Safety factor S more than 1.5。

■The torque required of the selected motor T must be within the scope of speed - torque

Stepping Motor Speed Torque Characteristic Curve

28 Stepping Motor

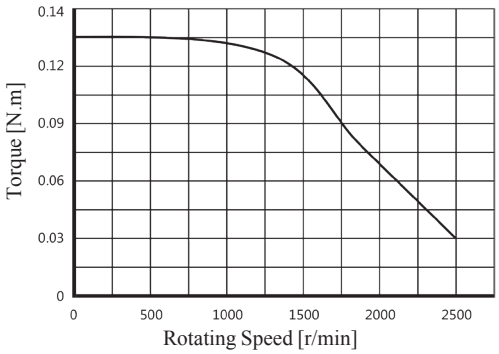

42 Stepping Motor

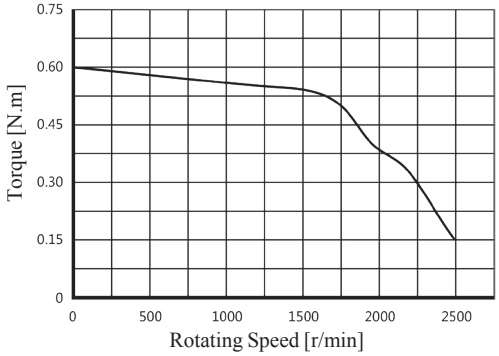

57 Stepping Motor

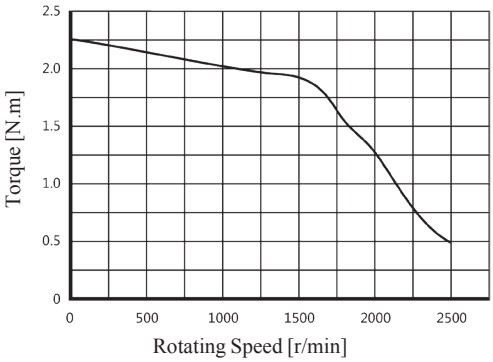

86 Stepping Motor

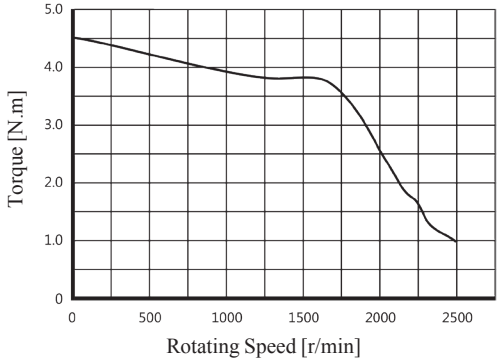

Axial Load, Calculation of Inertia Moment Load

When applying the load on the hollow rotating actuator as shown below, be sure to calculate that the axial load and the moment of inertia load are within the specified range of calculation of the following formula.

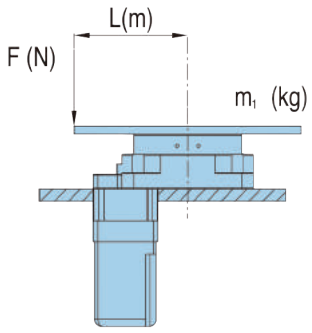

Axial Load [N]：$F_t=F+m_1xg$

Inertia Moment Load [N.m]：M=FxL

g：Gravity Acceleration 9.807[m/s^2]

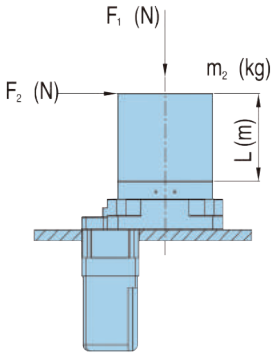

Axial Load [N]：$F_t=F_1+m_2xg$

Inertia Moment Load [N.m]：$M=F_2x$（L+A）

g：Gravity Acceleration 9.807[m/s^2]

Model	A
GSN60	0.010
GSB60	0.010
GSN85	0.015
GSB100	0.015
GSN130	0.017
GSB130	0.017
GSN200	0.033
GSB200	0.033

Actuator Rigid Reference

Different types of rotating actuators use different types of support bearings, which have a certain influence on the Permissible Moment of Inertia Load of the rotating platform, that is, the larger the model, the greater the permissible moment of inertia load. However, the amount of displacement for the moment of inertia load will be smaller. For details, refer to the following chart (L = 200mm).

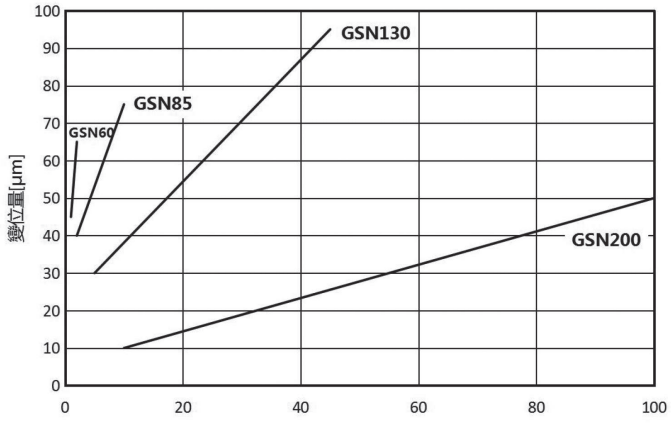

GSN Series Inertia Moment Load [N.m]

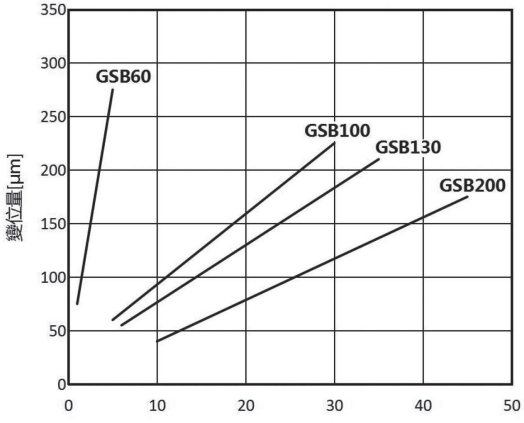

GSB Series Inertia Moment Load [N.m]

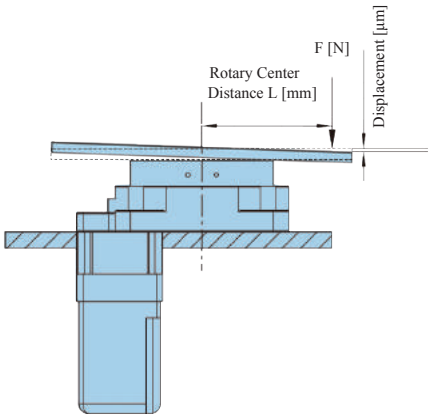

Terminology of Hollow Rotary Actuator

Motor Type	Rotating actuator adaptable motor type
Rotary Actuator Bearing	The type of bearing used for Rotary Actuator.
Permissible Torque Note 1	The mechanical strength thresholds of the speed reduction mechanism, including the acceleration torque and the load inertia, must be used within this Permissible Torque range.
Permissible Speed	The table surface speed allowed by the mechanical strength of the speed reduction mechanism.
Moment of Inertia	The sum of values of Moment of inertia of the motor rotor + the inertia of the deceleration mechanism on the rotating actuator.
Permissible Axial Load	Allowable value of axial load applied to the axis of the rotating platform.
Permissible Moment of Inertia Load	The load is applied at a position deviating from the center of the rotating platform, so that the force of the tilting of the rotating platform will occur when the center of the eccentricity × the load is calculated as the allowable value of the inertia moment load.
Positioning Accuracy	The error between the theoretical rotation angle and the actual rotation angle when the rotary platform is positioned at any point within 360°.
Repetitive Positioning Accuracy	Indicates the error value generated when the same position is repeatedly positioned from the same direction.
Platform Flatness	Operating amplitude of the table surface.
Platform Concentricity	Concentricity error value of inner and outer diameter of rotating platform without load.
Permissible Input Speed	The allowable input speed of the mechanical strength of the reducer structure.
Backlash	Refers to the gear clearance of the rotating platform after fixing the motor shaft.
Destructive Torque	When the reducer is subjected to this torque, the structure will be destroyed.
Precision Lifespan	Designed life span that maintains accuracy under normal use of the reducer.
Ingress Protection Note 3	For the protection structure of machines based on IEC529 and EN60034-5 (= IEC60034-5), it can be classified according to the degree of dustproof and waterproof.

Note 1：Unit Exchange of Torque

Torque Unit	1 N.m	1 N.cm	1 kgf.m	1 kgf.cm	1 lbf.ft	1 lbf.in
1 N.m	1	10^{2}	0.10197	10.197	0.7376	8.8509
1 N.cm	10^{-2}	1	1.0197×10^{-3}	0.10197	7.376×10^{-3}	8.8509×10^{-2}
1 kgf.m	9.8066	980.665	1	10^{2}	7.233	86.79
1 kgf.cm	9.8066×10^{-2}	9.8066	10^{-2}	1	7.233×10^{-2}	0.8680
1 lbf.ft	1.356	1.356×10^{2}	0.1383	13.83	1	12
1 lbf.in	0.113	11.3	1.152×10^{-2}	1.152	8.333×10^{-2}	1

Note 2：Angle Units

Angle Units	Value	Symbol	Shorthand
Degree	1/360 Circle	°	Deg
Arc minute	1/60 degree	’ (prime number)	arcmin,amin,MOA
Arc-second	1/60 arcmin	” (Double prime number)	arcsec
1/1000 Arc Second	1/1000 arcsec		mas

Note 3：IP Ingress Protection

IP No.	Dustproof (first number)
IP 0 X	No special protection
IP 1 X	Objects over 50mm in diameter cannot enter
IP 2 X	Objects over 80mm in length and over 12mm in diameter cannot enter
IP 3 X	Objects with a diameter or thickness exceeding 2.5 mm and a diameter exceeding 2.5 mm cannot enter
IP 4 X	Objects with a thickness exceeding 1.0 mm and a diameter exceeding 1.0 mm cannot enter
IP 5 X	Prevent incoming dust from affecting equipment operation
IP 6 X	Completely prevent dust from entering

IP No.	Waterproof (second number)
IP X 0	No special protection
IP X 1	Drops falling vertically will not cause damage to the appliance
IP X 2	Prevents water droplets from immersing when tilted 15 degrees
IP X 3	In the range of 60° from the vertical direction, the sprayed water spray is not damaged.
IP X 4	Spilled by water in any direction without damage
IP X 5	Directly affected by water spray in any direction without damage
IP X 6	Impact water in any direction directly subjected to strong currents does not enter the interior
IP X 7	Underwater immersion can still be used normally under certain conditions
IP X 8	Can be used underwater

Precautions of Using Hollow Rotary Actuator

Be sure to read the precautions described below to avoid damaging the device or causing injury to the user. Failure to read and understand the following precautions may damage the product, related equipment and systems, or cause serious or potential damage.

- Avoid hammering the product with a hammer or dropping the product.
- Be careful when connecting the product to the load side.
- Be careful when handling the edges and key sides of the product.
- Avoid touching the rotating shaft with your hands and other foreign objects when using the product.
- Avoid excessive impact on the product when assembling pulleys, linkages, and mechanical keys.
- Do not exceed Permissible Torque, as this may result in loose, vibrating or damaged bolts.
- Do not disassemble and reassemble the product to avoid damage or affect product performance.
- If the product is abnormal, stop the operation immediately, otherwise it may adversely affect the system.

Warranty

GIGA PRECISION promises to provide customers with lifelong product maintenance service from the date of product sale. For faulty products that are under warranty but do not meet the warranty conditions and products that exceed the warranty period, GIGA PRECISION provides paid repair service. See the detailed provisions below for specific repair services.

Warranty Scope

- The free warranty period will take effect from the date of purchase; it will expire 12 months after the date of purchase. If the product fails during the warranty period, GIGA PRECISION will provide customers with repair or replacement products according to this warranty;
- Free warranty provided by GIGA PRECISION in case of defects in materials or workmanship;
- The failure of the product and its components during the warranty period in accordance with normal operating conditions or conditions specified by GIGA PRECISION.

The following conditions occur during the warranty period, GIGA PRECISION does not provide free warranty service.

- Damage to the product caused by improper handling;
- The faulty product that the customer has dismantled without permission;
- Products that fail to properly use the product for direct damage or accidental damage;
- Damage caused by natural disasters and other accidents.

Guangdong Saini Intelligent Equipment Technology Co., Ltd.
Address: F3,Zhangshen Ave South No.25, Zhangmutou Town, Dongguan,Guangdong,China
Tele: +86 769 87782670 Email: info@gigager.com
Website: www.gigager.net
Trademark information: Brand G+, GIGAGER,吉嘉 owned by Saini Intelligent.